9575

236-4389LH

REVISIONS			
SYM	DESCRIPTION	DATE	APPROVED
A	CHANGE P/N 14	93026	
B	CHANGE DIM ON P/N 3 AND CNTR. DIM	93113	
C	ADD MARKINGS "DO NOT STAND ON END"	93257	

PRESERVATION AND PACKAGING

LEVEL A IN A/W SPEC MIL-P-116, METHOD III

DESICCANT- N/A

LEVEL B- NOT APPLICABLE

LEVEL C SAME AS LEVEL A

CLEANING AND DRYING
IN A/W SPEC MIL-P-116

PRESERVATION COMPOUND
—— N/A

CUSHIONING AND DUNNAGE
AS INDICATED IN LIST OF MATERIALS AND ON NOTES —— APPLICABLE TO ALL LEVELS.

PACKING

SHIPPING CONTAINER SHALL CONFORM TO REQUIREMENTS SPECIFIED BELOW AND LIST OF MATERIALS IN A/W REQUIRED OR STIPULATED LEVEL OF PACKING FOR THE MODE OF SHIPMENT.

	SPEC	STYLE	TYPE	CL	VAR	GR
LEVEL A-	MIL-C-26195	A	II	I (MOD.)		
LEVEL B-			I			
LEVEL C-			I			

GROSS CUBE

LEVEL	A	B	C
	411	411	411

GROSS WEIGHT

LEVEL	A	B	C
	—	—	—

CNTR O.D ALL LEVELS $107\frac{1}{8}$ X $107\frac{1}{8}$ X55

ITEM NET DIM. 102 X $101\frac{5}{8}$ X 37
ITEM NET WT.

MARKING AND CLOSURE

MARK OR STENCIL CONTAINERS "REUSABLE PACK-DO NOT DESTROY".

IN ADDITION TO OTHER SPECIFIED MARKING CONTAINERS SHALL BE MARKED IN A/W MIL-STD-129.

STENCIL IN ONE INCH HIGH LETTERS "TO OPEN CNTR REMOVE LAG BOLTS," ON FOUR SIDES AND TOP.

DO NOT STAND ON END

DATA SHOWN HEREON ALSO APPLIES TO THE FOLLOWING ITEMS

FED STOCK NO.	PART NO.
1560- 236-4389LH	9667M27G21

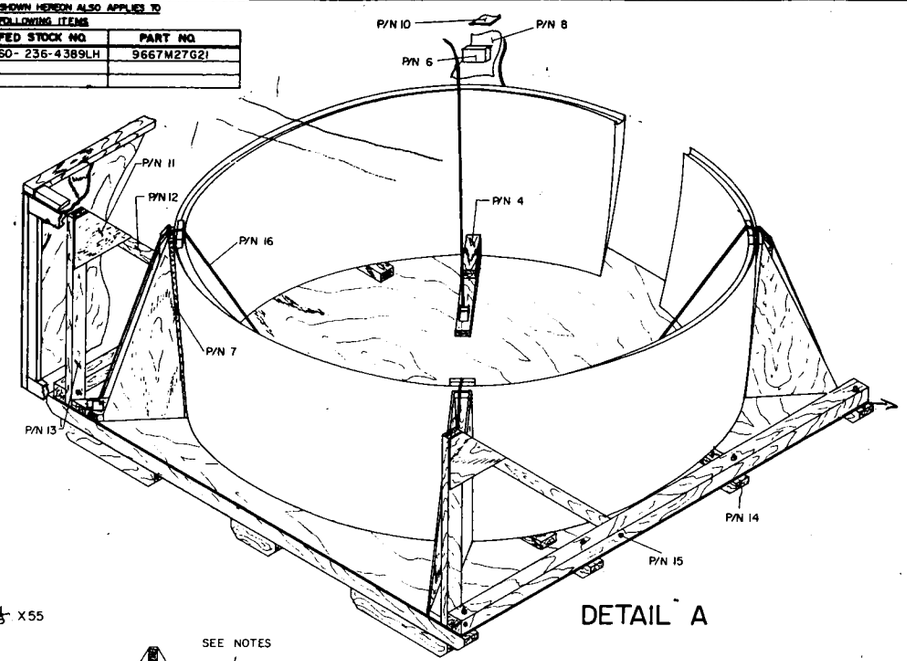

DETAIL A

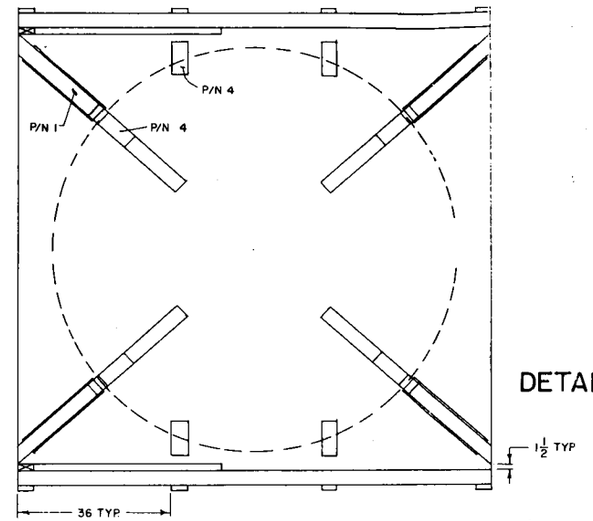

DETAIL B

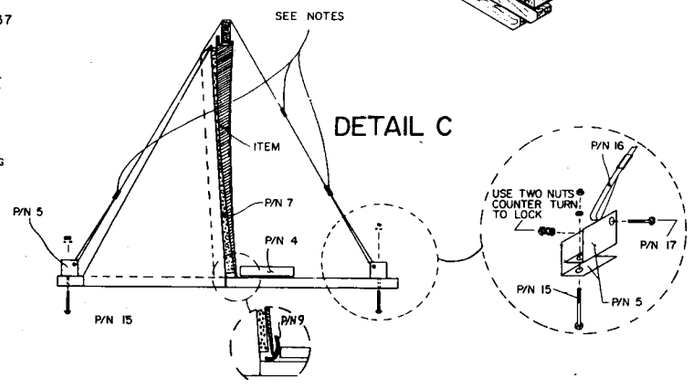

DETAIL C

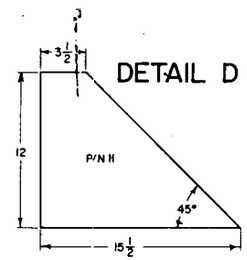

DETAIL D

NOTES:
1. STAMP TPO NO. IN BLACK INK, MIN. 1/2" LETTERS ON ALL CRATE COMPONENTS AND EXT. CNTR.

2. CHAMFER BOTH ENDS 3-1/2" X 45° OF P/N 12.

3. WRAP BLOCK P/N 6 WITH MAT'L. P/N 8

4. POSITION ITEM ON SKID BASE WITH BLOCKING (DETAIL C) IN POSITION. POSITION BRACKETS P/N 5 AS PER DETAIL C AND SECURE WITH BOLTS P/N 15.

POSITION BLOCKS P/N 6 AND CUSHIONING PADS P/N 10 (SEE DETAIL A). ATTACH ONE END OF A LENGTH (APPROX. 58") OF STRAPPING TO OUTSIDE BRACKET. ATTACH AN END OF A SECOND PIECE OF STRAPPING (APPROX. 30") TO INSIDE BRACKET. TENISON LOOSE ENDS OF BOTH STRAPS AND CRIMP. (REF. DETAILS A & B.).

POSITION AND SECURE BLOCK P/N 4 WITH CUSHIONING P/N 9 (REF. DETAILS A & C).

PART NO.	NO REQD	NOMENCLATURE OR DESCRIPTION		MATERIAL OR NOTE
18	1	EXTERIOR CNTR	105 X 105 X 46 I.D.	SEE PACKING
17	8	BOLT, MACHINE	3/8 X 2-1/2 W/ TWO NUTS, ONE LOCK WASHER	STEEL
16	A/R	STRAPPING	3/4 X .025	QQ-S-781
15	12	BOLTS, CARRIAGE	3/8 X 6-1/2	STEEL
14	4	SKIDS	4 X 4 X 107-1/4 NOM. LMBR. GP 2 OR 3	MIL-STD-731
13	2	VERTICAL	2 X 4 X 43-7/8 " " "	" "
12	2	BRACE	2 X 4 X 62 SEE NOTES AND DETAILS A, C, & E	" "
11	2	GUSSET	1/2 PLY SEE DETAILS A & D	NN-P-530
10	4	PAD	4 X 4 X 1/8 TYPE II, GR C, FIRM	MIL-R-20092
9	8	PAD	4 X 6 X 1/8 " "	" "
8	A/R	WRAP	SEE NOTES GR A	MIL-B-121
7	4	CUSHIONING	34 X 4-1/2 X 1	MIL-C-26842
6	4	BLOCK	2 X 4 X 4	MIL-STD-731
5	8	BRACKET	3 X 1-1/2 X 2-1/2	MIL-S-21041
4	8	BLOCK	2 X 4 X 8	MIL-STD-731
3	8	BRACE	1/2 PLY SEE DETAIL E	NN-P-530
2	4	FILLER, VERTICAL	2 X 4 X 36 NOM. LMBR. SEE DET. B, C, E- GP 2 OR 3	MIL-STD-731
1	4	FILLER, LOWER	2 X 4 X 52 " " "	" "

BILL OF MATERIALS, OR PARTS LIST

NOMENCLATURE	CODE IDENT	IDENTIFYING NO.	SPECIFICATION	MATERIAL	UNIT WT	SOURCE	FED CIR

LIST OF MATERIALS

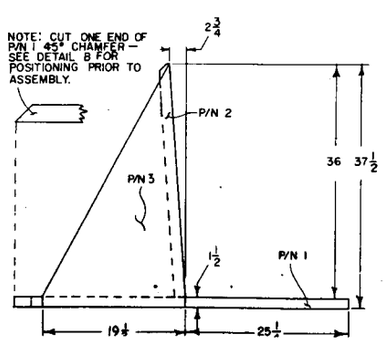

DETAIL E

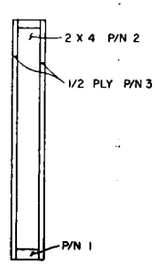

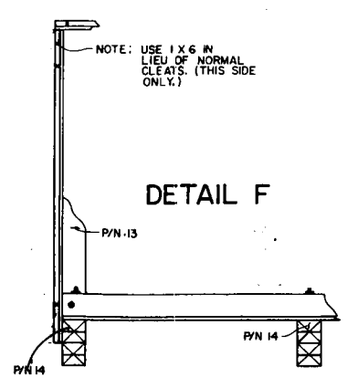

DETAIL F

UNLESS OTHERWISE SPECIFIED DIMENSIONS ARE IN INCHES
TOLERANCES ON DECIMALS .XX ± .XXX ± FRACTIONS ± ANGLES ±
MATERIAL

		DATE
DRAFTSMAN	Arthur J. Gagon Jr	21 MAR 72
DESIGNER	Cowin W. Jones	21 MAR 72
ENGINEER	Arthur J. Gagon Jr	21 MAR 72
A.F. PROJ. ENGR		21 MAR 72
CONTRACT INSPECTOR		
A.F. DESIGN ACTIVITY AUTHENTICATION	R. O. Kilcoyne	21 MAR 72

U.S. AIR FORCE
SAAMA KELLY AFB, TEXAS

TITLE
COWL- C5

SIZE C | A.F. CODE IDENT NO. 98750 | TRANSPORTATION PACKAGING ORDER NUMBER 236-4389L H

A